Always there to help you

Register your product and get support at
www.philips.com/welcome

Question? Contact Philips

DTB3185

User manual

PHILIPS

Contents

1 Safety and Notice 2
Safety 2
Notice 3

2 Your Micro System 5
Introduction 5
What's in the box 5
Overview of the main unit 6
Overview of the remote control 7

3 Get started 9
Connect the FM/DAB antenna 9
Connect power 9
Prepare the remote control 9
Set clock 10
Store radio stations automatically 10
Turn on 11
Demonstrate the unit's features 11

4 Play 12
Play a disc 12
Play from USB 13
Play from a Bluetooth device 13

5 Play iPod/iPhone 15
Compatible iPod/iPhone 15
Load the iPod/iPhone 15
Listen to the iPod/iPhone 16
Charge the iPod/iPhone 16
Remove the iPod/iPhone 16

6 Listen to radio 17
Store DAB radio stations automatically 17
Basic operations 17
Use the menu 18

7 Adjust sound 19
Adjust volume 19
Select a preset sound effect 19
Mute sound 19

8 Other features 20
Set the sleep timer 20
Set the alarm timer 20
Play from an external audio device 21
Adjust display brightness 21

9 Product information 22
Specifications 22
USB playability information 23
Supported MP3 disc formats 23
RDS program types 23
Maintenance 24

10 Troubleshooting 25

1 Safety and Notice

Read and understand all instructions before you use this product. If damage is caused by failure to follow the instructions, the warranty does not apply.

Safety

Warning

- Never remove the casing of this apparatus.
- Never lubricate any part of this apparatus.
- Never place this apparatus on other electrical equipment.
- Keep this apparatus away from direct sunlight, naked flames or heat.
- Never look into the laser beam inside this apparatus.
- Ensure that you always have easy access to the power cord, plug or adaptor to disconnect this apparatus from the power.

1. Read these instructions.
2. Keep these instructions.
3. Heed all warnings.
4. Follow all instructions.
5. Do not use this apparatus near water.
6. Clean only with dry cloth.
7. Do not block any ventilation openings. Install in accordance with the manufacturer's instructions.
8. Do not install near any heat sources such as radiators, heat registers, stoves, or other apparatus (including amplifiers) that produce heat.
9. Protect the power cord from being walked on or pinched, particularly at plugs, convenience receptacles, and the point where they exit from the apparatus.
10. Only use attachments/accessories specified by the manufacturer.
11. Use only with the cart, stand, tripod, bracket, or table specified by the manufacturer or sold with the apparatus. When a cart is used, use caution when moving the cart/apparatus combination to avoid injury from tip-over.

12. Unplug this apparatus during lightning storms or when unused for long periods of time.
13. Refer all servicing to qualified service personnel. Servicing is required when the apparatus has been damaged in any way, such as power-supply cord or plug is damaged, liquid has been spilled or objects have fallen into the apparatus, the apparatus has been exposed to rain or moisture, does not operate normally, or has been dropped.
14. Apparatus shall not be exposed to dripping or splashing.
15. Do not place any sources of danger on the apparatus (e.g. liquid filled objects, lighted candles).
16. Where the MAINS plug or an appliance coupler is used as the disconnect device, the disconnect device shall remain readily operable.
17. Make sure there is enough free space around the product for ventilation.
18. Batteries (battery pack or batteries installed) shall not be exposed to excessive heat such as sunshine, fire or the like.

Care for your product

- Do not insert any objects other than discs into the disc compartment.
- Do not insert warped or cracked discs into the disc compartment.
- Remove the discs from the disc compartment if you are not using the product for an extended period of time.
- Only use microfiber cloth to clean the product.

Care of the environment

Your product is designed and manufactured with high quality materials and components, which can be recycled and reused.

When this crossed-out wheeled bin symbol is attached to a product it means that the product is covered by the European Directive 2002/96/EC.

Please inform yourself about the local separate collection system for electrical and electronic products.

Please act according to your local rules and do not dispose of your old products with your normal household waste. Correct disposal of your old product helps to prevent potential negative consequences for the environment and human health.

Your product contains batteries covered by the European Directive 2006/66/EC, which cannot be disposed with normal household waste.Please inform yourself about the local rules on separate collection of batteries because correct disposal helps to prevent negative consequences for the environmental and human health.

Compliance

CE 0890

Hereby, WOOX Innovations declares that this product is in compliance with the essential requirements and other relevant provisions of Directive 1999/5/EC. You can find the Declaration of Conformity on www.philips.com/support.

This apparatus includes this label:

Note

- The type plate is located on the back of the apparatus.

Notice

Any changes or modifications made to this device that are not expressly approved by WOOX Innovations may void the user's authority to operate the equipment.

Environmental information

All unnecessary packaging has been omitted. We have tried to make the packaging easy to separate into three materials: cardboard (box), polystyrene foam (buffer) and polyethylene (bags, protective foam sheet.)

Your system consists of materials which can be recycled and reused if disassembled by a specialized company. Please observe the local regulations regarding the disposal of

packaging materials, exhausted batteries and old equipment.

Be responsible Respect copyrights

The making of unauthorized copies of copy-protected material, including computer programs, files, broadcasts and sound recordings, may be an infringement of copyrights and constitute a criminal offence. This equipment should not be used for such purposes.

Made for iPod iPhone

"Made for iPod" and "Made for iPhone" mean that an electronic accessory has been designed to connect specifically to iPod or iPhone respectively, and has been certified by the developer to meet Apple performance standards. Apple is not responsible for the operation of this device or its compliance with safety and regulatory standards. Please note that the use of this accessory with iPod or iPhone may affect wireless performance.

iPod and iPhone are trademarks of Apple Inc., registered in the U.S. and other countries.

Bluetooth

The Bluetooth® word mark and logos are registered trademarks owned by Bluetooth SIG, Inc. and any use of such marks by WOOX Innovations is under license.

apt X csr

© 2013 CSR plc and its group companies.

The aptX® mark and the aptX logo are trade marks of CSR plc or one of its group companies and may be registered in one or more jurisdictions.

2 Your Micro System

Congratulations on your purchase, and welcome to Philips! To fully benefit from the support that Philips offers, register your product at www.philips.com/welcome.

Introduction

With this unit, you can:

- enjoy audio from discs, USB devices, iPod/ iPhone, Bluetooth devices, and other external devices
- listen to radio stations

The unit supports the following media formats:

What's in the box

Check and identify the contents of your package:

- Main unit
- Remote control with an AAA battery
- Power cord
- DAB antenna
- Printed materials

Overview of the main unit

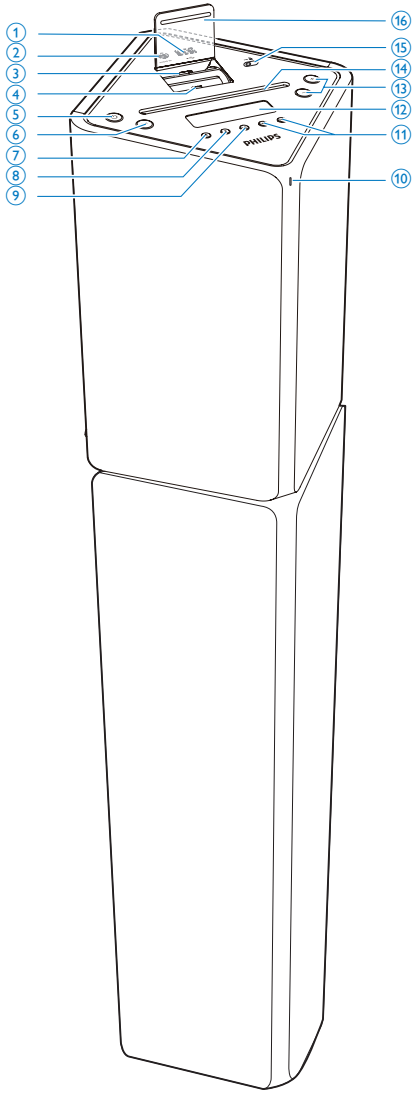

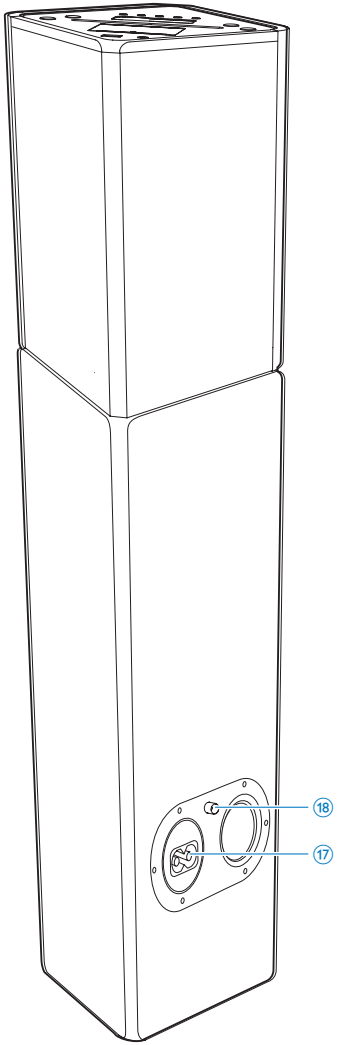

1 ⇠

- USB socket.

2 AUDIO IN

- 3.5mm audio input socket.

3 Dock for iPod/iPhone with 30-pin connection

4 Dock for iPod/iPhone with lightning connection

⑤ ⏻
- Turn on the unit, switch to Standby mode, or switch to Eco Power mode.

⑥ SRC
- Select a source: DISC, USB, TUNER, DAB, IPOD_IPHONE, BT, or AUDIO IN.

⑦ ⏏
- Eject the disc.

⑧ ■
- Stop play.
- Erase a program.
- Access the iPod/iPhone menu.
- In standby mode, turn on/off the demonstration feature.

⑨ ▶II
- Start or pause play.

⑩ LED indicator

⑪ ⏮ / ⏭
- Skip to the previous/next track.
- Tune to a radio station.
- Press and hold the key to search within a track/disc/USB/iPod/iPhone.

⑫ Display panel
- Show the current status.

⑬ +/-
- Adjust volume.
- Adjust time.

⑭ Disc compartment

⑮ Toggle switch for lightning/30-pin control

⑯ Dock cover

⑰ AC ~ MAINS
- Power supply socket.

⑱ FM/DAB ANTENNA

Overview of the remote control

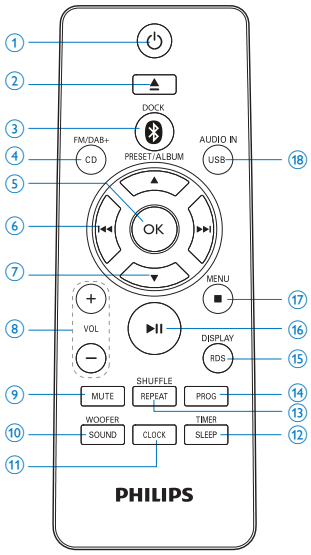

① ⏻
- Turn on the unit, or switch to Standby mode, or switch to Eco Power mode.

② ⏏
- Eject the disc

③ /DOCK
- Select the dock(IPOD_IPHONE) or Bluetooth source.

④ CD/FM/DAB+
- Select the disc source.
- Select the FM/DAB+ radio source.

⑤ OK
- Confirm a selection.
- Switch between STEREO and MONO in tuner mode.

⑥ ⏮ / ⏭
- Skip to the previous/next track.
- Tune to a radio station.
- Press and hold the key to search within a track/disc/USB/iPod/iPhone.

⑦ PRESET/ALBUM ▲ / ▼
- Skip to the previous/next album.
- Select a preset radio station.
- Navigate through the iPod/iPhone menu.
- Adjust time.

⑧ VOL+/-
- Adjust volume.
- Adjust time.

⑨ MUTE
- Mute or restore volume.

⑩ SOUND/WOOFER
- Select a preset sound setting.
- Activate the volume adjustment of the subwoofer.

⑪ CLOCK
- Set clock in standby mode.
- Display the current time in any source mode.

⑫ SLEEP/TIMER
- Set the sleep timer.
- Set the alarm timer.

⑬ REPEAT/SHUFFLE
- Select the repeat play mode.
- Select the random play mode.

⑭ PROG
- Program tracks in disc/USB source.
- Program radio stations.

⑮ RDS/DISPLAY
- Select RDS broadcast information.
- Synchronize clock with RDS station.
- Select display information during play.
- Adjust display brightness in standby mode.

⑯ ▶❚❚
- Start or pause play.

⑰ ■ /MENU
- Stop play.
- Erase a program.
- Access the iPod/iPhone menu.
- In standby mode, turn on/off feature demonstration.

⑱ USB/AUDIO IN
- Select the USB source.
- Select the external audio source.

3 Get started

Caution

- Use of controls or adjustments or performance of procedures other than herein may result in hazardous radiation exposure or other unsafe operation.

Always follow the instructions in this chapter in sequence.

If you contact Philips, you will be asked for the model and serial number of this apparatus. The model number and serial number are on the rear of the apparatus. Write the numbers here:

Model No. _____

Serial No. _____

Connect the FM/DAB antenna

Tip

- Make sure that you have connected and fully extended the antenna before your connect the power supply.
- For better reception, connect an outdoor FM antenna to the **FM/DAB ANTENNA** socket.
- The unit does not support MW radio reception.

- Connect the supplied FM/DAB wire antenna to the **FM/DAB ANTENNA** socket.

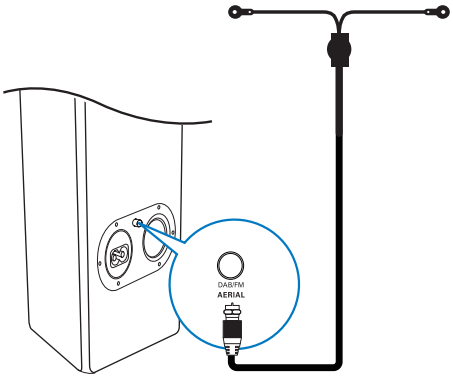

Connect power

Caution

- Risk of product damage! Make sure that the power voltage corresponds to the voltage printed on the back or underside of the unit.
- Risk of electric shock! When you unplug the AC power cord, always pull the plug from the socket. Never pull the cord.
- Before connecting the AC power cord, ensure you have completed all other connections.

- Connect the power cord to:
  - the **AC ~ MAINS** socket on the main unit.
  - the wall outlet.

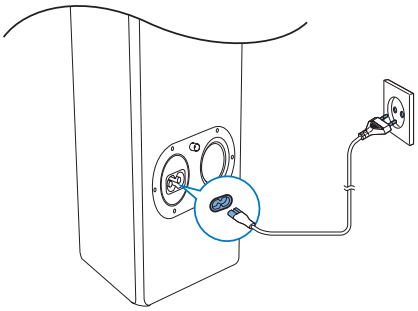

Prepare the remote control

Caution

- Risk of explosion! Keep batteries away from heat, sunshine or fire. Never discard batteries in fire.

To insert the remote control battery:

1 Open the battery compartment.

2 Insert 1 AAA battery with correct polarity (+/-) as indicated.

3 Close the battery compartment.

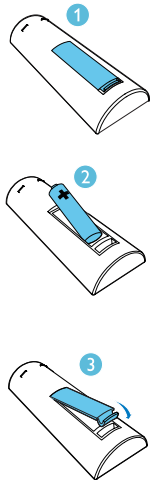

Note

- If you are not going to use the remote control for a long time, remove the battery.
- Batteries contain chemical substances, so they should be disposed of properly.

Set clock

Note

- You can set the clock in standby mode only.

1 In standby mode, press and hold **CLOCK** to activate the clock setting mode.

2 Press **PRESET/ALBUM** ▲ / ▼ to select 12 hour or 24 hour format.

3 Press **CLOCK** to confirm.
↳ The hour digits begin to blink.

4 Press **PRESET/ALBUM** ▲ / ▼ to set the hour.

5 Press **CLOCK** to confirm.
↳ The minute digits begin to blink.

6 Press **PRESET/ALBUM** ▲ / ▼ to set the minute.

7 Press **CLOCK** to confirm.

Note

- You can also press **VOL -/+** on remote control or main unit to set hour format/hour/minute.
- To exit clock setting mode without storing, press ■ /**MENU**.
- If no button is pressed in 90 seconds, the system exits clock setting mode automatically.

Tip

- You can press **CLOCK** to view the clock in any source mode.

Store radio stations automatically

If no radio stations are stored, the unit can store radio stations automatically.

1 Turn on the unit.

2 Press **CD/FM/DAB+** repeatedly to select the FM tuner source.
↳ [AUTO INSTALL -- PRESS PLAY -- STOP CANCEL] (press ▶II to start automatic installation, or press ■ to cancel) is displayed.

3 Press ▶II.
↳ The unit automatically stores FM radio stations with sufficient signal strength.
↳ After all available radio stations are stored, the first stored radio station is broadcast automatically.

Turn on

- Press ⏻.
  ↪ The unit switches to the last selected source.

Switch to standby

- Press ⏻ again to switch the unit to standby mode.
  ↪ The clock (if set) appears on the display panel.

Switch to ECO Power mode:

- Press and hold ⏻ for more than three seconds.
  ↪ **[ECOPOWER]** (Eco Power) is displayed briefly.

Tip

- The unit switches to Eco Power mode after 15 minutes in standby mode.

Switch between standby mode and Eco Power mode:

- In standby/Eco Power mode, press and hold ⏻ to switch the unit to Eco Power/ standby mode.

Demonstrate the unit's features

- In standby mode, press ■ /**MENU** until **[WELCOME TO PHILIPS]** (welcome to Philips) scrolls from the right to the left on the display, and then **[DEMO ON]** (demo on) is displayed briefly.
  ↪ This system's features are displayed one by one.
  - To turn off the demonstration, press ■ /**MENU** again.

Note

- You can also press ■ on the main unit to turn on/ turn off the demonstration.

4 Play

Play a disc

1 Press **CD/FM/DAB+** repeatedly to select the disc source.

2 Insert a disc with the printed side facing frontward.

3 Play starts automatically. If not, press ▶II.

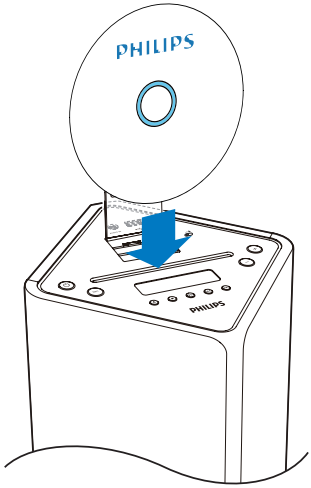

Skip to a track

For CD:

- Press I◀◀ / ▶▶I to select another track.

For MP3 disc and USB:

1 Press **PRESET/ALBUM** ▲ / ▼ to select an album or a folder.

2 Press I◀◀ / ▶▶I to select a track or a file.

Search within a track

1 During play, press and hold I◀◀ / ▶▶I.

2 Release to resume normal play.

Program tracks

Note

- You can program tracks only when the play stops.

You can program a maximum of 20 tracks.

1 Press **PROG** to activate the program mode.
↳ **[PROG]** (program) is displayed.

2 For MP3/WMA tracks, press **PRESET/ALBUM** ▲ / ▼ to select an album.

3 Press I◀◀ / ▶▶I to select a track, then press **PROG** to confirm.

4 Repeat steps 2 to 3 to program more tracks.

5 Press ▶II to play the programmed tracks.
↳ During play, **[PROG]** (program) is displayed.
- To erase the program, in the stop position, press ■ /**MENU**.

Display play information

- During play, press **RDS/DISPLAY** repeatedly to select different play information.
  - For CD: Lap time of the current track, lap time remained of the current track, lap time remained of all tracks.
  - For MP3/WMA disc and USB: ID3 information, such as **[TITLE]** (title), **[ARTIST]** (artist), **[ALBUM]** (album).

Select repeat/shuffle play options

1 During play, press **REPEAT/SHUFFLE** repeatedly to select a repeat option or the shuffle play mode.
- **REP**: the current track is played repeatedly.
- **REP ALL**: all tracks are played repeatedly.
- **REP ALB**: all the tracks in the album are played repeatedly.
- **SHUF**: all tracks are played randomly.

2 To resume normal play, press **REPEAT/SHUFFLE** repeatedly until no option is displayed.

Play from USB

Note

- Make sure that the USB device contains playable audio content.

1 Insert the USB mass storage device into the ⇜ socket.

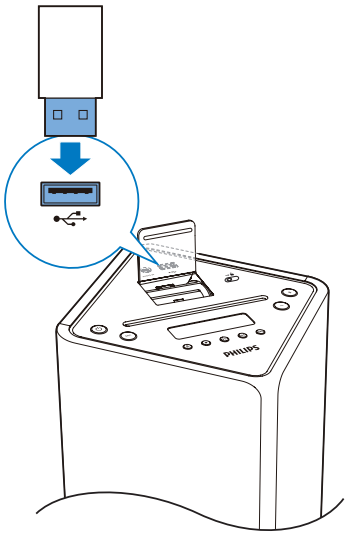

2 Press **USB/AUDIO IN** repeatedly to select the USB source.
↳ Play starts automatically. If not, press ▶II.
- To select a folder, press **PRESET/ALBUM** ▲ / ▼.
- To select an audio file, press I◀◀ / ▶▶I.

Play from a Bluetooth device

You can listen to a Bluetooth device through the unit.

Note

- Before you connect a Bluetooth device to the unit, familiarize yourself with the Bluetooth capabilities of the device.
- Keep the unit away from other electronic devices that may cause interference.
- The effective operation range between the unit and the paired device is approximately 10 meters (30 feet).
- Any obstacle between the unit and the Bluetooth device can reduce the operational range.

1 Press ᛒ /**DOCK** repeatedly to select the Bluetooth source.

2 Activate the Bluetooth function on your Bluetooth device (see the device user manual).

3 Select "PHILIPS DTB3185" on your device for pairing.
↳ The LED indicator flashes.
↳ **[BT]** displays on the screen.
- For some devices, you may need to input '0000' as the pairing password.

4 After successful connection, the unit beeps twice and the LED indicator lights up blue.

5 Start music play on your Bluetooth device.

Tip

- If the unit switches from Bluetooth source to other sources, the connected Bluetooth device disconnects automatically.
- The unit can memorize up to 8 previously connected Bluetooth devices.

To clear Bluetooth pairing history:

- Press and hold ■ for more than three seconds.
  - ↳ The current Bluetooth connection is disconnected.
  - ↳ The unit beeps twice after BT paring history is cleared successfully.

5 Play iPod/iPhone

You can enjoy audio from iPod/iPhone through this unit.

Compatible iPod/iPhone

With the integrated dual docks, the unit supports the following iPod, and iPhone models:

Made for (lightning connection):

- iPhone 5
- iPod nano (7th generation)
- iPod touch (5th generation)

Also made for (30-pin connection):

- iPhone 4S
- iPhone 4
- iPhone 3GS
- iPhone 3G
- iPhone
- iPod nano (2nd/3rd/4th/5th/6th generation)
- iPod classic
- iPod touch (1st/2nd/3rd/4th generation)

Load the iPod/iPhone

1 Lift up the dock cover.

2 Slide the → switch to the right and hold it.

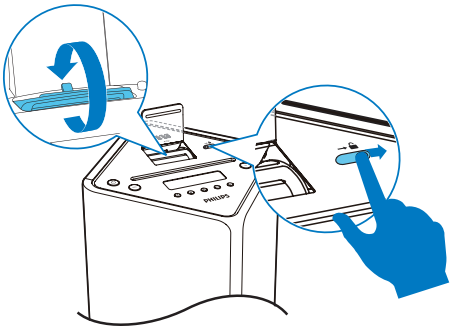

3 Swivel the dock connectors to the front or back to select the lightning or 30-pin connector, then release the switch.

4 Dock your iPod/iPhone.

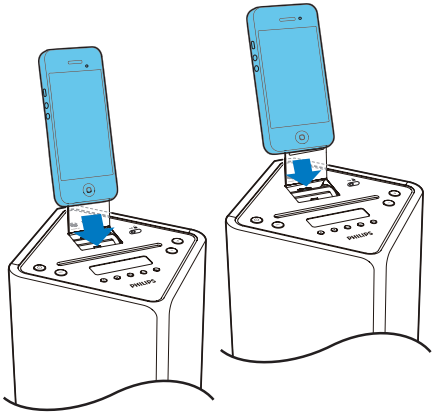

Listen to the iPod/iPhone

Note

- Make sure that your iPod/iPhone has been loaded securely.

1 Press ⓑ /**DOCK** repeatedly to select the dock source.

2 Play audio on your iPod/iPhone.

- To navigate in the menu: press **MENU**/ ■, and press ▲ / ▼ / ⏮ / ⏭ to select, and then press **OK** to confirm.
- To pause/resume play, press ▶❚❚.
- To skip to a track, press ⏮ / ⏭.
- To search during play, press and hold ⏮ / ⏭, then release to resume normal play.

Charge the iPod/iPhone

- When the unit is connected to power, the docked iPod/iPhone begins to charge automatically.

Remove the iPod/iPhone

- Pull the iPod/iPhone out of the dock.

6 Listen to radio

Note

- For optimal reception, fully extend the antenna and adjust its position, or connect an outdoor antenna.
- This product does not support MW (medium wave) radio reception.
- You can program a maximum of 30 DAB radio stations and 20 FM radio stations.
- Check with local retailer or go to www.WorldDAB.org for the applicable DAB radio frequencies in your area.
- Refer to "**Product information**" > "**RDS program types**" for more information about RDS radio stations.

Store DAB radio stations automatically

If no DAB radio station is stored, this product can search and store DAB radio stations automatically.

1 Press **CD/FM/DAB+** repeatedly to switch to the DAB mode.
   ↳ **[FULL SCAN]** (full scan) is displayed.

2 Press ▶II on the main unit or **OK** on the remote control to start the auto installation.
   ↳ This product automatically stores radio stations with sufficient signal strength.
   ↳ After all available radio stations are stored, the first stored radio station is broadcast automatically.

Basic operations

Follow the instructions below for more functions.

Tune to the next FM radio station with sufficient signal strength at the lower/higher frequency:

Press and hold I◀◀ / ▶▶I to start the auto search.

Tune to the FM radio station at a specific frequency:

Press I◀◀ / ▶▶I repeatedly until the frequency digitals are displayed.

Program FM radio stations automatically:

Press and hold **PROG** to start auto programming.

Program DAB radio stations automatically:

Press and hold **PROG** to start auto scanning and programming.

Program radio stations manually:

1) Tune to a radio station.

2) Press **PROG** to activate programming.

3) Press **PRESET/ALBUM** ▲ / ▼ to assign a sequence number to the radio station.

4) Press **PROG** to confirm.

5) Repeat steps 1-4 to program more radio stations.

Tune to a preset radio station:

Press **PRESET/ALBUM** ▲ / ▼ repeatedly.

Switch the audio mode between [STEREO] (stereo) and [MONO] (monophonic) for FM radio:

Press **OK** repeatedly.

Display available information about the current radio station:

Press **RDS/DISPLAY** repeatedly.

Synchronize the clock with an RDS radio station:

1) Tune to an RDS radio station that transmits time signals.

2) Press **RDS/DISPLAY** to show the RDS time.

2) Press and hold **RDS/DISPLAY** until **[CT SYNC]** is displayed.

English

Use the menu

When you listen to radio, you can access the menu for control options.

1 Press ■ /**MENU**.
   ↪ FM mode: **[SCAN SET]** (scan set) is displayed.
   ↪ DAB mode: **[STATION]** (station) is displayed.

2 Press ⏮ / ⏭ to select a menu option, and then press ▶❚❚ on the main unit or **OK** on the remote control to confirm the option or enter the lower-level menu.

FM mode:

[SCAN SET] (scan set)	Search and store radio stations automatically: **[STRONG]** (strong) for radio stations with strong signal only, **[ALL]** (all) for all radio stations.
[AUDIO] (audio)	Select a sound mode: **[STEREO]** (stereo) or **[MONO]** (mono).
[SYSTEM] (system)	**[RESET]** (reset): Reset all settings to the factory default status.
	[SW VER] (software version): Display the current version of the firmware.

DAB mode:

[STATION] (station)	Access the list of the previously stored DAB radio stations. Press ⏮ / ⏭ to select a station, and then ▶❚❚ on the main unit or **OK** on the remote control to start listening.
[FULL SN] (full scan)	Scan and store DAB radio stations within full range.
[MANUAL] (manual)	Tune to a DAB radio station manually.
[DRC] (dynamic range control)	Select a level for the effect of dynamic range control.
[SYSTEM] (system)	**[RESET]** (reset): Reset all radio settings to the factory default status.
	[SW VER] (software version): Display the version of the current firmware.

3 Press ■ /**MENU** to exit the menu.

7 Adjust sound

Adjust volume

- During play, press **VOL +/-** to increase/decrease the volume.

Adjust volume of the subwoofer

1. During play, press and hold **SOUND/WOOFER** to activate volume adjustment of subwoofer.
2. Press **VOL +/-** to increase/decrease the subwoofer volume within 5 seconds.

Select a preset sound effect

- During play, press **SOUND/WOOFER** repeatedly to select:
  - **[BALANCED]** (balanced)
  - **[WARM]** (warm)
  - **[BRIGHT]** (bright)
  - **[POWERFUL]** (powerful)
  - **[CLEAR]** (clear)

Mute sound

- During play, press **MUTE** to mute/unmute sound.

8 Other features

Set the sleep timer

This unit can switch to standby automatically after a set period of time.

- When the unit is turned on, press **SLEEP/TIMER** repeatedly to select a set period of time (in minutes).
  - **[SLEEP OFF]**
  - **[SLEEP -- 120]**
  - **[SLEEP -- 90]**
  - **[SLEEP -- 60]**
  - **[SLEEP -- 45]**
  - **[SLEEP -- 30]**
  - **[SLEEP -- 15]**

  ↳ When sleep timer is activated, zZ is displayed.

To deactivate sleep timer

- Press **SLEEP/TIMER** repeatedly until **[SLEEP OFF]** (sleep off) is displayed.

  ↳ When sleep timer is deactivated, zZ disappears.

Set the alarm timer

This unit can be used as an alarm clock. The DISC, USB, TUNER, DAB, IPOD_IPHONE or PLAYLIST is activated to play at a preset time.

1. Press ⏻ to switch the unit to standby mode.
2. Make sure that you have set the clock correctly.
3. Press and hold **SLEEP/TIMER**.

   ↳ A prompt to select the source is displayed.
4. Press a source key to select a source: DISC, USB, TUNER, DAB, IPOD_IPHONE or PLAYLIST.
5. Press **SLEEP/TIMER** to confirm.

   ↳ The hour digits begin to blink.
6. Press **PRESET/ALBUM ▲ / ▼** to set the hour.
7. Press **SLEEP/TIMER** to confirm.

   ↳ The minute digits begin to blink.
8. Press **PRESET/ALBUM ▲ / ▼** to set the minute.
9. Press **SLEEP/TIMER** to confirm.

   ↳ The **[VOL]** (volume) begins to blink.
10. Press **PRESET/ALBUM ▲ / ▼** to adjust the volume, then press **SLEEP/TIMER** to confirm.

    ↳ The timer is set and activated.

Tip

- For source selection, you can also press **VOL+/-** or **PRESET/ALBUM ▲ / ▼** on the remote control or **+/-** on the main unit.
- For hour/minute/volume adjustment, you can also press **VOL+/-** on the remote control or the main unit.

Activate and deactivate the alarm timer

1. Press ⏻ to switch the unit to standby mode.
2. Press **SLEEP/TIMER** repeatedly to activate or deactivate the timer.

   ↳ If the timer is activated, the display shows ⏲.

   ↳ If the timer is deactivated, ⏲ disappears on the display.

Note

- In AUDIO IN mode, the alarm timer cannot be set.
- If DISC/USB/Dock source is selected and the track cannot be played, tuner is activated automatically.
- If iPod/iPhone playlist is selected as the alarm source, you need create a playlist called "PHILIPS" on your iPod/iPhone.
- If no playlist named "PHILIPS" exists on the iPod/iPhone or the playlist includes no playable track, this product switches the alarm source to the iPod/iPhone library.

Play from an external audio device

You can play from an external audio device such as MP3 player through this unit.

1 Connect a 3.5mm audio cable (not supplied) to:
   - the **AUDIO IN** socket on the unit.
   - the headphone socket on the audio device.

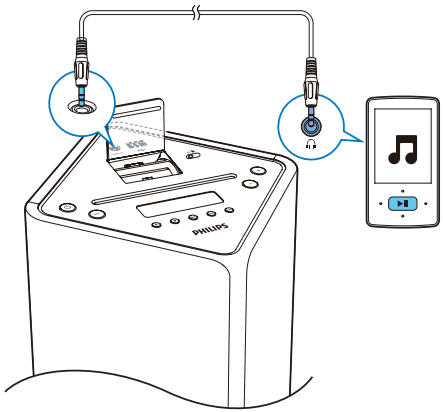

2 Press **USB/AUDIO IN** repeatedly to select the 3.5mm audio input source.

3 Play the external audio device.

Adjust display brightness

Note

- You can adjust the display brightness in standby mode only.

- In standby mode, press **RDS/DISPLAY** repeatedly to adjust the display brightness.
   - Full brightness (100%)
   - Half brightness (70%)
   - Brightness low (40%)

9 Product information

Note

- Product information is subject to change without prior notice.

Specifications

Amplifier

Maximum Output Power	2 x 15W + 30W RMS
Frequency Response	45 Hz - 20 kHz, ± 3 dB
Signal to Noise Ratio	> 77 dBA
Audio In Input	600mV RMS 22 kΩ

Disc

Laser Type	Semiconductor
Disc Diameter	12 cm
Support disc	CD-DA, CD-R, CD-RW, MP3-CD, WMA-CD
Audio DAC	24 Bits / 44.1 kHz
Total Harmonic Distortion	< 0.8% (1 kHz)
Frequency Response	4 Hz -20 kHz (44.1 kHz)
Signal to Noise Ratio	> 77 dBA

Tuner (FM)

Tuning Range	87.5 - 108 MHz
Tuning grid	50 KHz
Sensitivity	
- Mono, 26dB S/N Ratio	< 22 dBf
- Stereo, 46dB S/N Ratio	< 43 dBf
Search Selectivity	> 28 dBf
Total Harmonic Distortion	< 2%
Signal to Noise Ratio	> 55 dB

DAB Tuner

Tuning Range	174–240 MHz (Band III)
Sensitivity	> 90 dBf

Bluetooth

Standard	Bluetooth Standard Version 2.1+EDR
Frequency band	2.402~2.480 GHz ISM Band
Range	10m (free space)

Speakers

Speaker Impedance	8 ohm
Speaker Driver	65 mm full range
Sensitivity	>84dB/m/W

General information

AC power	110-240V ~, 50/60 Hz
Operation Power Consumption	45 W
Eco Standby Power Consumption	< 0.5 W
USB Direct	Version 2.0HS
Dimensions (W x H x D)	
- Main Unit	234 x 920 x 238 mm
Weight	
- Main Unit	9.0 kg

USB playability information

Compatible USB devices:

- USB flash memory (USB 1.1 and USB 2.0)
- USB flash players (USB 1.1 and USB 2.0)
- memory cards (requires an additional card reader to work with this unit)

Supported formats:

- USB or memory file format FAT12, FAT16, FAT32 (sector size: 512 bytes)
- MP3 bit rate (data rate): 32-320 Kbps and variable bit rate
- WMA v9 or earlier
- Directory nesting up to a maximum of 8 levels
- Number of albums/ folders: maximum 99
- Number of tracks/titles: maximum 999
- ID3 tag v2.0 to v2.3
- File name in Unicode UTF8 (maximum length: 16 bytes)

Supported MP3 disc formats

- ISO9660, Joliet
- Maximum title number: 999 (depending on file name length)
- Maximum album number: 99
- Supported sampling frequencies: 32 kHz, 44.1 kHz, 48 kHz
- Supported Bit-rates: 32~320 (kbps), variable bit rates

RDS program types

NO TYPE	No RDS programme type
NEWS	News services
AFFAIRS	Politics and current affairs
INFO	Special information programs
SPORT	Sports
EDUCATE	Education and advanced training
DRAMA	Radio plays and literature
CULTURE	Culture, religion and society
SCIENCE	Science
VARIED	Entertainment programs
POP M	Pop music
ROCK M	Rock music
MOR M	Light music
LIGHT M	Light classical music
CLASSICS	Classical music
OTHER M	Special music programs
WEATHER	Weather
FINANCE	Finance
CHILDREN	Children's programs
SOCIAL	Social Affairs
RELIGION	Religion
PHONE IN	Phone In
TRAVEL	Travel
LEISURE	Leisure
JAZZ	Jazz Music
COUNTRY	Country Music
NATION M	National Music
OLDIES	Oldies Music
FOLK M	Folk Music
DOCUMENT	Documentary
TES	Alarm Test
ALARM	Alarm

Maintenance

Clean the cabinet

- Use a soft cloth slightly moistened with a mild detergent solution. Do not use a solution containing alcohol, spirits, ammonia or abrasives.

Clean discs

- When a disc becomes dirty, clean it with a cleaning cloth. Wipe the disc from the centre out.

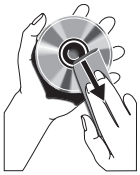

- Do not use solvents such as benzene, thinner, commercially available cleaners, or antistatic spray intended for analogue records.

Clean the disc lens

- After prolonged use, dirt or dust may accumulate at the disc lens. To ensure good play quality, clean the disc lens with Philips CD lens cleaner or any commercially available cleaner. Follow the instructions supplied with cleaner.

10 Troubleshooting

Warning

- Never remove the casing of this apparatus.

To keep the warranty valid, never try to repair the system yourself.

If you encounter problems when using this unit, check the following points before requesting service. If the problem remains unsolved, go to the Philips web site (www.philips.com/support). When you contact Philips, ensure that the unit is nearby and the model number and serial number are available.

No power

- Ensure that the AC power cord of the unit is connected properly.
- Ensure that there is power at the AC outlet.
- As a power-saving feature, the system switches off automatically 15 minutes after track play reaches the end and no control is operated.

No sound or poor sound

- Adjust the volume.

No response from the unit

- Disconnect and reconnect the AC power plug, then turn on the unit again.
- As a power-saving feature, the system switches off automatically 15 minutes after track play reaches the end and no control is operated.

Remote control does not work

- Before you press any function button, first select the correct source with the remote control instead of the main unit.
- Reduce the distance between the remote control and the unit.
- Insert the batteries with its polarities (+/– signs) aligned as indicated.
- Replace the batteries.
- Aim the remote control directly at the sensor on the front of the unit.

No disc detected

- Insert a disc.
- Check if the disc is inserted upside down.
- Wait until the moisture condensation at the lens has cleared.
- Replace or clean the disc.
- Use a finalized CD or correct format disc.

Cannot display some files in USB device

- The number of folders or files in the USB device has exceeded a certain limit. This phenomenon is not a malfunction.
- The formats of these files are not supported.

USB device not supported

- The USB device is incompatible with the unit. Try another one.

Poor radio reception

- Increase the distance between the unit and your TV or VCR.
- Connect an outdoor FM/DAB antenna instead.

Timer does not work

- Set the clock correctly.
- Switch on the timer.

Clock/timer setting erased

- Power has been interrupted or the power cord has been disconnected.
- Reset the clock/timer.

Music playback is unavailable on this unit even after successful Bluetooth connection.

- The device cannot be used to play music through this unit wirelessly.

The audio quality is poor after connection with a Bluetooth-enabled device.

- The Bluetooth reception is poor. Move the device closer to this unit or remove any obstacle between them.

Cannot connect with this unit.

- The device does not support the profiles required for this unit.
- The Bluetooth function of the device is not enabled. Refer to the user manual of the device to find out how to enable the function.
- This unit is not in pairing mode.
- This unit is already connected with another Bluetooth-enabled device. Disconnect that device and then try again.

The paired mobile device connects and disconnects constantly.

- The Bluetooth reception is poor. Move the device closer to this unit or remove any obstacle between them.
- Some mobile phones may connect and disconnect constantly when you make or end calls. This does not indicate any malfunction of this unit.
- For some devices, the Bluetooth connection may be deactivated automatically as a power-saving feature. This does not indicate any malfunction of this unit.

Specifications are subject to change without notice.
2013 © WOOX Innovations Limited. All rights reserved.
This product was brought to the market by WOOX Innovations Limited or one of its affiliates, further referred to in this document as WOOX Innovations, and is the manufacturer of the product. WOOX Innovations is the warrantor in relation to the product with which this booklet was packaged. Philips and the Philips Shield Emblem are registered trademarks of Koninklijke Philips N.V.

DTB3185_10_UM_V2.0