Philips
LCD monitor

107cm (42")
Multi-touch
Full HD

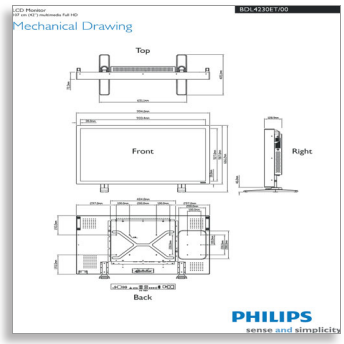

BDL4230ET

More audience interaction

with the touchscreen 107 cm (42") LCD Display

Deliver vital information or marketing messages to your audience in startling clarity with the BDL4230ET display. And thanks to the interactive touchscreen, you can also engage your customer much closer than ever before.

Operational flexibility
- Optical Multi-touch screen for additional user interaction
- Smart insert in the backcover to place a small pc
- Remote Management and Configuration via RS232

Optimized for public viewing
- Full HD LCD display, 1920x1080p

Lower total cost of ownership
- SmartPower for energy saving
- Brightness automatically adjusts with ambient conditions
- Advanced anti image sticking function

Sustainable and safe
- Complies with RoHS standards to care for the environment

PHILIPS

Highlights

Optical Multitouch
A brand new level of client interaction is now possible thanks to the integrated optical touch screen. The sensors on the edge of the screen give you perfect clarity whilst at the same time offering dual touch (multi-touch with Windows 7), opening up all kinds of possibilities for new, interactive applications.

Smart insert
Professional PC's are part of most public signage installations. Quite often they increase the overall depth to the display and cause a lot of cable clutter. So we have designed this display with Smart insert in the backcoverwhich is ideal for the integration of a professional small form factor PC. On top of that, the cable management system offers a great solution to keep your cables neat and professional looking.

SmartPower
The backlight intensity can be controlled and pre-set by the system to reduce the power consumption by up to 50%, which saves substantially on energy costs.

Full HD LCD display 1920x1080p
This display has a resolution that is referred to as Full HD. The state-of-the-art LCD screen technology has the full high-definition widescreen resolution of 1080 progressive lines, each with 1920 pixels. This allows the best possible picture quality for HD input signals with up to 1080 lines. It produces brilliant flicker-free progressive scan pictures with optimum brightness and superb colors. This vibrant and sharp image will provide you with an enhanced viewing experience.

Automatic brightness control
The adjustment of display settings to correspond with ambient light without user intervention.

Advanced anti image sticking
Static images left on-screen for extended periods of time may leave a "ghost image" or image sticking effect on LCD displays. Although image sticking in LCD displays is not permanent, you want to prevent this to happen, especially in locations where content is shown 24/7.

Remote Management:: RS232
Remote Management allows the user to control and adjust the displays remotely via the RS232 protocol. Using CEC commands, you are able to have full control over all the displays in your signage network at any time.

Compliant with RoHS standards
Philips designs and produces display products in compliance with strict Restriction of Hazardous Substances (RoHS) standards that restrict lead and other toxic substances that can harm the environment.

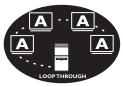

LCD monitor
107cm (42") Multi-touch, Full HD

BDL4230ET/00

Specifications

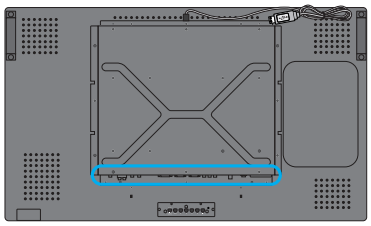

Issue date 2017-07-06

Version: 13.3.1

12 NC: 8670 000 76894
EAN: 87 12581 60482 0

© 2017 Koninklijke Philips N.V.
All Rights reserved.

Specifications are subject to change without notice.
Trademarks are the property of Koninklijke Philips N.V.
or their respective owners.

www.philips.com